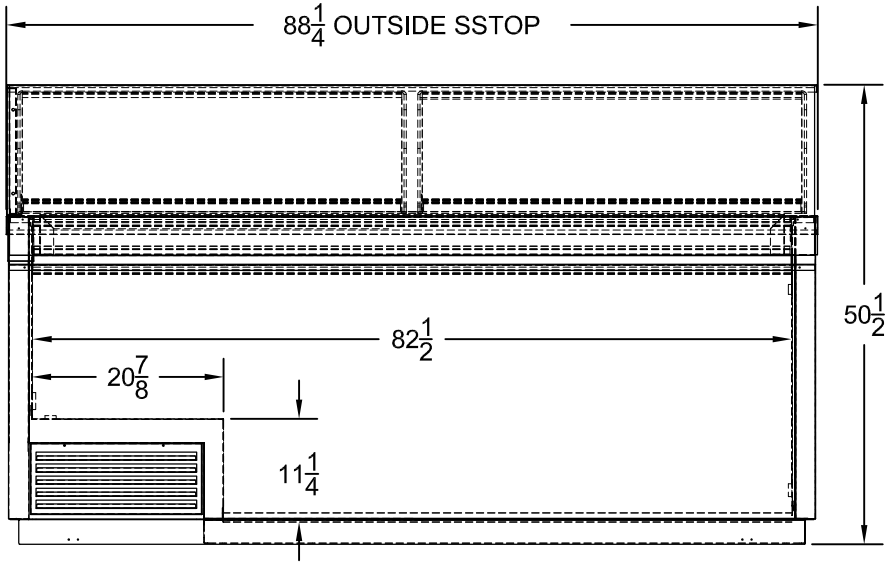

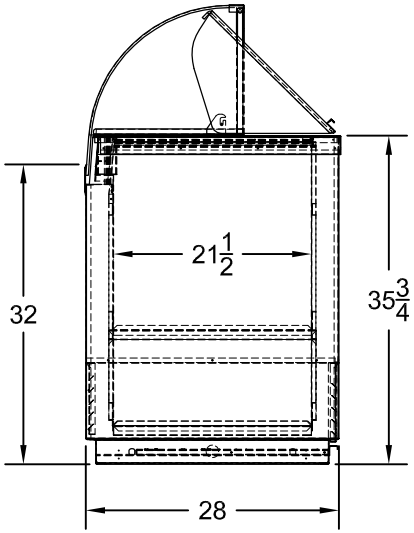

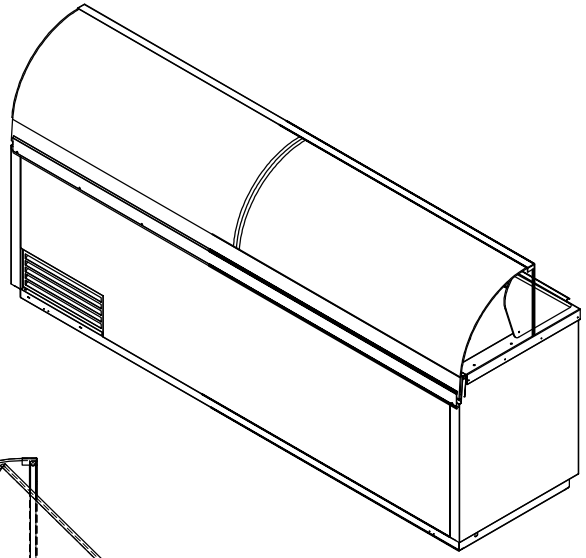

PROPRIETARY AND CONFIDENTIAL

THE INFORMATION CONTAINED IN THIS DRAWING IS THE SOLE PROPERTY OF C. NELSON MFG. ANY REPRODUCTION IN PART OR AS A WHOLE WITHOUT THE WRITTEN PERMISSION OF C. NELSON MFG. IS PROHIBITED.

NEXT ASSY	USED ON
APPLICATION	

UNLESS OTHERWISE SPECIFIED:

DIMENSIONS ARE IN INCHES
TOLERANCES:
FRACTIONAL ±
ANGULAR: MACH ± BEND ±
TWO PLACE DECIMAL ±
THREE PLACE DECIMAL ±

INTERPRET GEOMETRIC TOLERANCING PER:

MATERIAL

FINISH – –

DO NOT SCALE DRAWING

	NAME	DATE
DRAWN	BJR	8/17/2010
CHECKED		
ENG APPR.		
MFG APPR.		
Q.A.		

COMMENTS:

C. Nelson Mfg.

TITLE:

16DIP HI-VIZ

SIZE	DWG. NO.	REV
A	245	

SCALE: 1:16 | WEIGHT: | SHEET 1 OF 1