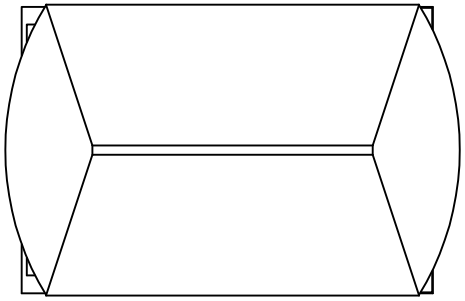

TOP VIEW

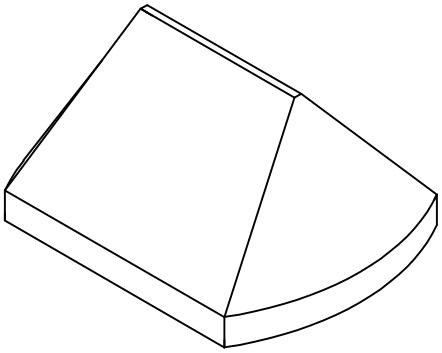

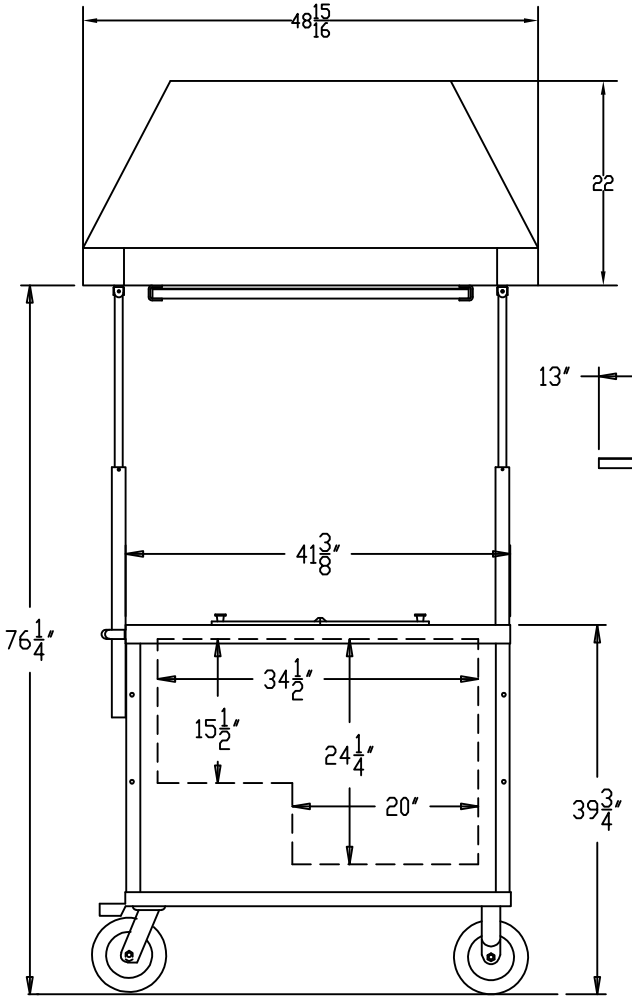

SIDE VIEW

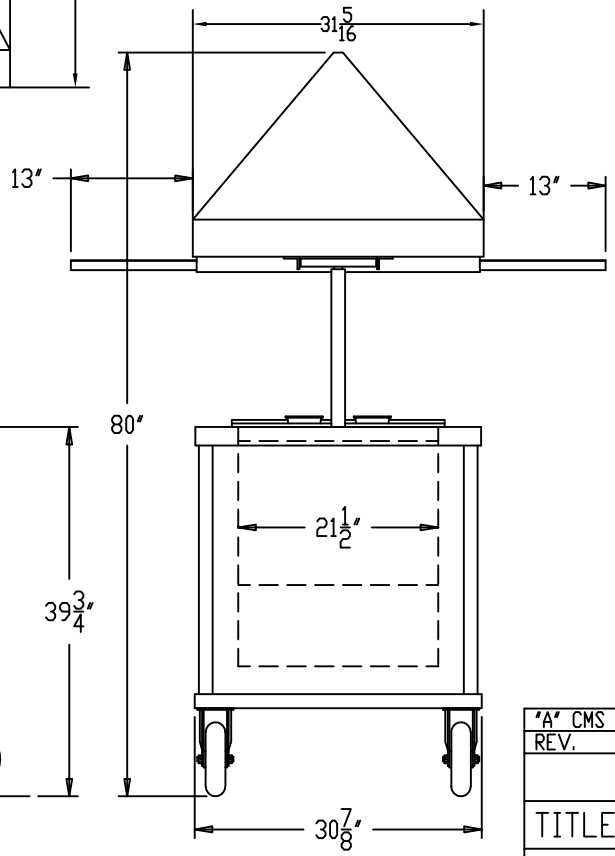

"A" CMS 03/07/05 ADDED SHADE AND BRACKET

REV.

C. NELSON MFG.

TITLE: BDC-8 W/SHAPED CANOPY

USED ON: PROPOSAL | 1 OF 1

DWN. BY: PAC
DATE: 11/03/04
SCALE: AUTO

PART NO.: 053

REV. A

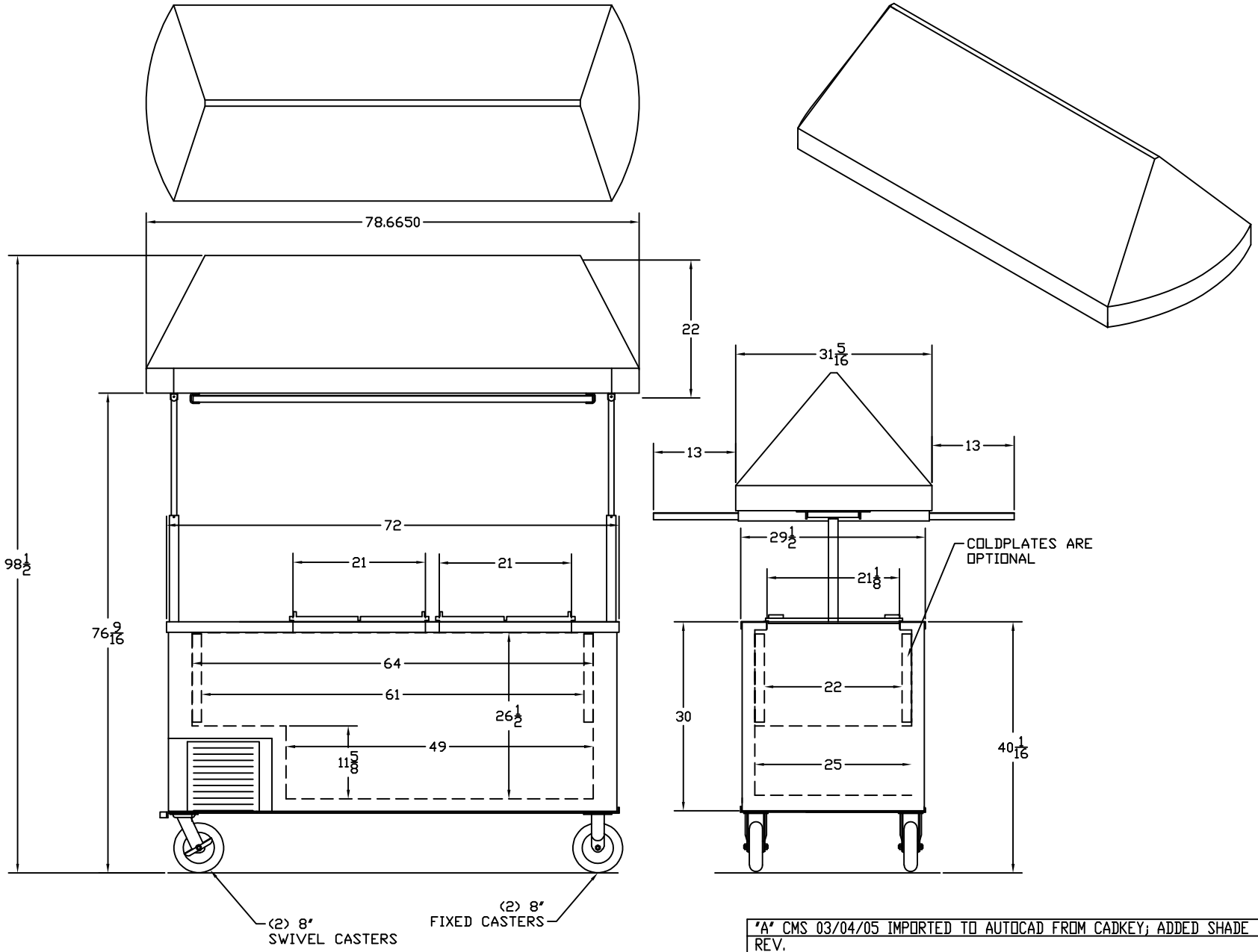

"A" CMS 03/04/05 IMPORTED TO AUTOCAD FROM CADKEY; ADDED SHADE AND BRKTS		
REV.		
C. NELSON MFG.		
TITLE: BD10-CU W/SHAPED CANOPY		
USED ON: BD10-CU		1 OF 1
DWN. BY: PAC DATE: 2/17/95 SCALE: AUTO	PART NO.: 030	REV. A

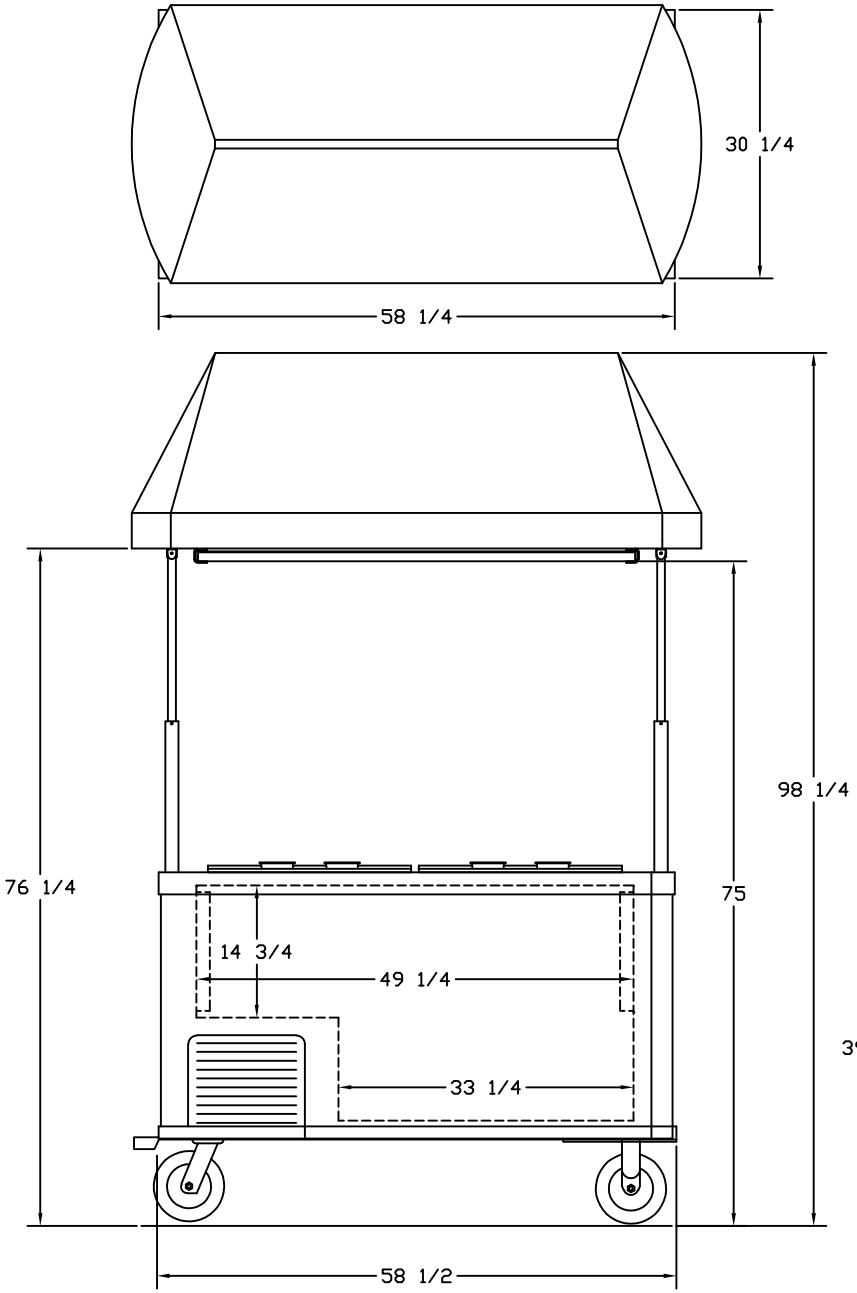

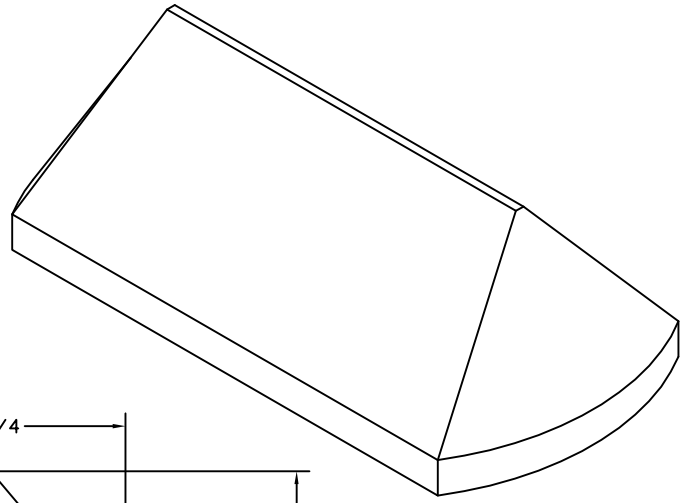

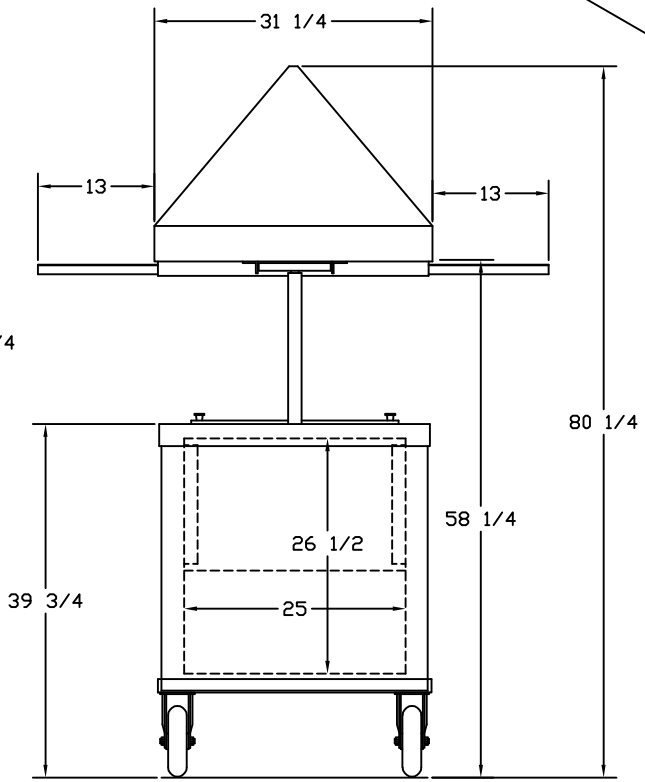

REV.		
C. NELSON MFG.		
TITLE: BD8CE SHORT W/ SHAPED CANOPY		
USED ON: BD8CE		1 OF 1
DWN. BY: CMS DATE: 03/07/05 SCALE: AUTO	PART NO.: 056	REV. NR