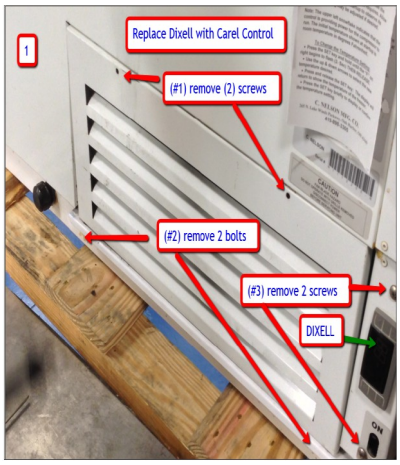
1
Replace Dixell with Carel Control
(#1) remove (2) screws
(#2) remove 2 bolts
(#3) remove 2 screws
DIXELL

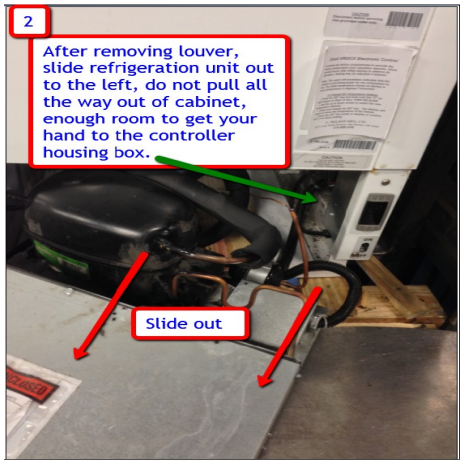
2
After removing louver, slide refrigeration unit out to the left, do not pull all the way out of cabinet, enough room to get your hand to the controller housing box.
Slide out

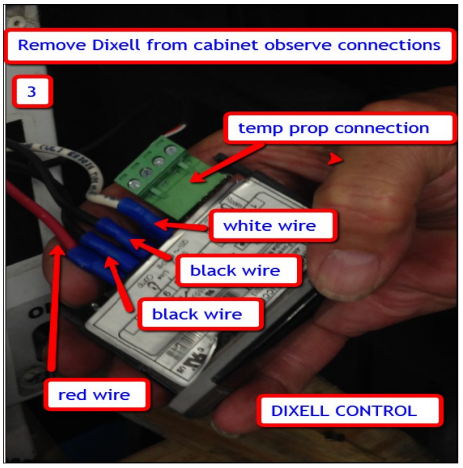
Remove Dixell from cabinet observe connections
3
temp prop connection
white wire
black wire
black wire
red wire
DIXELL CONTROL

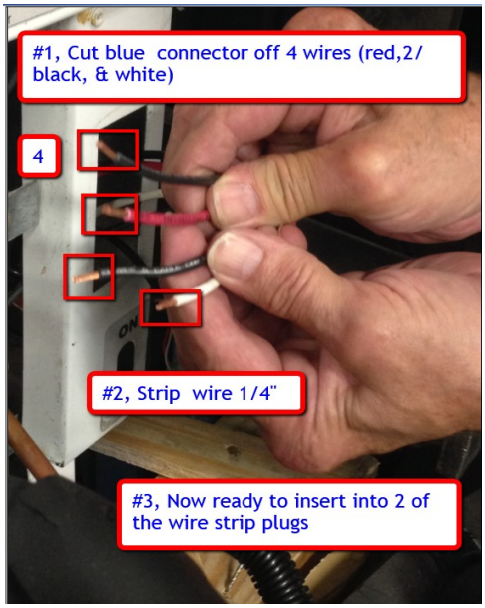
#1, Cut blue connector off 4 wires (red,2/ black, & white)
4
#2, Strip wire 1/4"
#3, Now ready to insert into 2 of the wire strip plugs

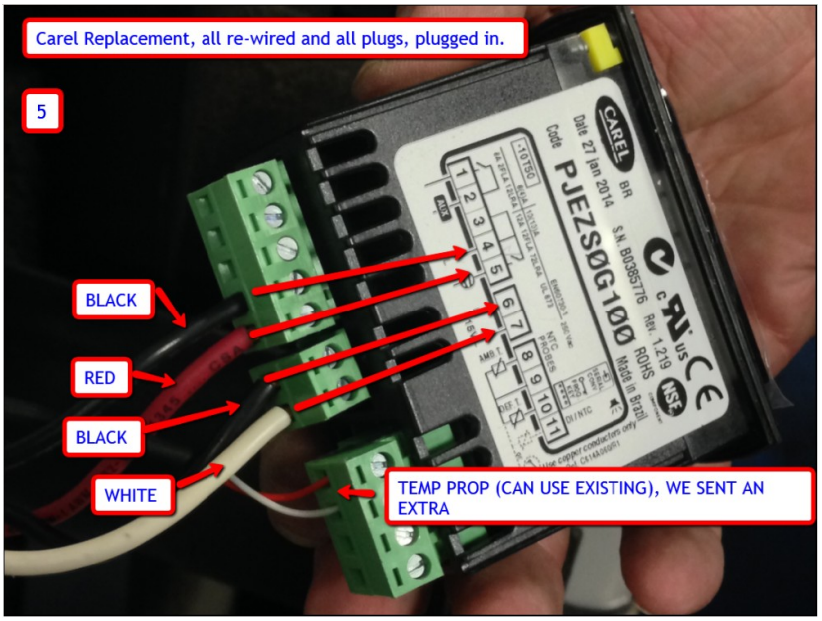
Carel Replacement, all re-wired and all plugs, plugged in.
5
BLACK
RED
BLACK
WHITE
TEMP PROP (CAN USE EXISTING), WE SENT AN EXTRA

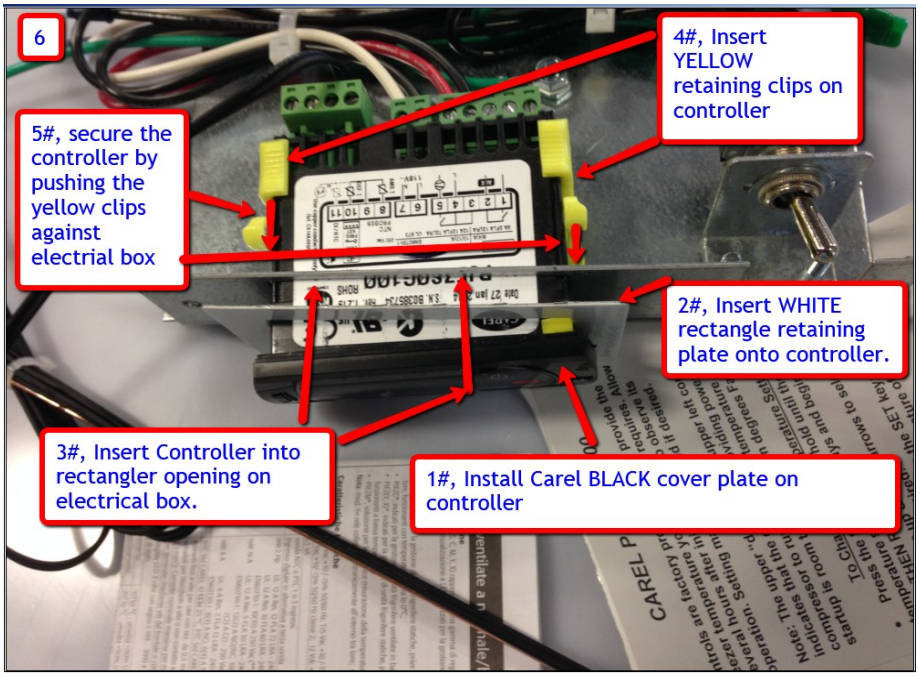
6
4#, Insert YELLOW retaining clips on controller
5#, secure the controller by pushing the yellow clips against electrial box
2#, Insert WHITE rectangle retaining plate onto controller.
3#, Insert Controller into rectangler opening on electrical box.
1#, Install Carel BLACK cover plate on controller

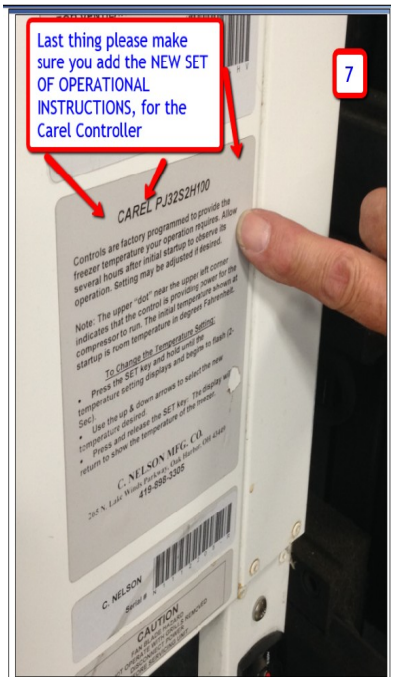
Last thing please make sure you add the NEW SET OF OPERATIONAL INSTRUCTIONS, for the Carel Controller
7
CAREL PJ32S2H100